THIS IS NOT AN ORDER - THIS IS A REQUEST FOR SEALED BIDS ONLY

P.R. NO: 193980

Date of Request
Or Date Publishing: **09/29/05**

Date Bid Due: 10/20/05

Time Bid Due: 9:45 A.M.

Time of Opening: 10:00 A.M.

DELIVERY POINT:

DEPT. OF TRANSPORTATION AND DEVELOPMENT
CENTRAL WAREHOUSE
STEPHEN W. GLASCOCK, P.E.
TRAFFIC OPERATIONS ADM.
7686 TOM DRIVE
BATON ROUGE, LA 70806

RETURN BID TO:
PROCUREMENT SECTION
ROOM 304M HEADQUARTERS
ADMINISTRATION
P.O. BOX 94245, CAPITOL STATION
1201 CAPITOL ACCESS ROAD, 70802,
BATON ROUGE, LA 70804-9245

DANA WATLINGTON, DOTD PROCUREMENT DIRECTOR

STOCK NUMBER	DESCRIPTION	QUANTITY	U.M.	UNIT PRICE	TOTAL AMOUNT	BRAND NAME AND NUMBER
34-95-8000	SIGN HOLDER, TRIPOD, STEEL, DOTD SPEC. 346-002, REV. 4/2/2003. EASTERN METAL USA SIGN, MODEL E-350; KORMAN KSI, SSI; OAE	1000	EA			
	---------- PLEASE NOTE SPECIAL PACKAGING IN SPECIFICATION. ---------- NOTE: MUST BE DELIVERED SECURELY BOUND ON PALLETS PALLET CHARGES NOT ALLOWED. PALLET CHARGES TO BE INCLUDED IN UNIT PRICE. ---------- TERMS:_____ DELIVERY:_____ ---------- IN ACCORDANCE WITH LOUISIANA R.S. 39:1595, A PREFERENCE OF 10% MAY BE ALLOWED FOR PRODUCTS MANUFACTURED, PRODUCED, GROWN, ASSEMBLED OR HARVESTED IN LOUISIANA OF EQUAL QUALITY. DO YOU CLAIM THIS 10% PREFERENCE: YES:_____NO:_____ SPECIFY LOCATION IN LOUISIANA:_____ SPECIFY ITEM NUMBER:_____NOTE:LOUISIANA VENDORS CLAIMING THIS PREFERENCE SHOULD ALSO CERTIFY THAT 50% OF THEIR WORKFORCE IS COMPRISED OF LOUISIANA RESIDENTS IN ORDER TO BE ENTITLED TO THE 10% PREFERENCE. LOUISIANA VENDORS SHOULD COMPLETE THE FOLLOWING CERTIFICATE: THIS IS TO CERTIFY THAT 50% OF WORKFORCE IS COMPRISED OF LOUISIANA RESIDENTS: YES:_____NO:_____(PROOF OF CERTIFICATION MAY BE REQUIRED) ---------- NOTE: ALL BIDDERS MUST FURNISH DESCRIPTIVE LITERATURE ON ALTERNATE BRANDS WITH HIS BID. IF DESCRIPTIVE LITERATURE IS NOT FURNISHED, BID WILL NOT BE CONSIDERED FOR AWARD. ---------- DELIVERIES ACCEPTED MONDAY THRU FRIDAY, 7:00 AM TO 3:30 PM. FOR ALTERNATE DELIVERY TIMES, PLEASE CALL (225) 935-0178. ----------					

If you need additional information, please call: **DEBBIE ROCK** (225)379-1410

SEE ATTACHMENT FOR SPECIAL, CONDITIONS, INSTRUCTIONS AND DEFINITIONS. FAILURE TO COMPLY WITH SAME MAY DISQUALIFY YOUR BID OR QUOTATION

FIRM:

MAILING ADDRESS:

BY: (signature)

City: State: Zip:

BY: (PRINT OR TYPE NAME)

REMITTANCE TO BE MADE TO ADDRESS OTHER THAN ABOVE:

PHONE #:

Street/Box _____ City_____ State____ Zip _____

FED. ID. NUMBER:

Vendor FAX Number:
Email Address:

INSTRUCTIONS FOR SUBMITTING BIDS

1. Type or print in ink in blanks provided. Bids submitted in pencil will not be accepted.
2. Any corrections, erasures or other forms of alteration to unit price should be initialed by the bidder.'
3. Bid must be as per specification(s) furnished.
4. Bidders must comply with all instructions shown in Invitation to Bid. Failure to comply may result in rejection of bid.
5. Bid should be submitted in unit of measure as requested. Bids submitted in a different unit of measure may not be considered for award.
6. Unit price for each item must not exceed four digits to right of decimal point. Unit price submitted beyond four digits will be rounded off to nearest fourth digit.
7. Give complete information, attach letter if more space is needed.
8. Bids must be quoted on a firm basis for a thirty day period from bid opening date.
9. Bid must be net and include all handling charges and transportation charges fully prepaid to destination unless delivery point indicates otherwise. Bids containing "Payment in Advance" will be rejected. Payment is to be made within 30 days after receipt of properly executed invoice or delivery, whichever is later.
10. Bids must be submitted exclusive of all Federal and State Taxes unless specified otherwise in bid form. State Agencies are exempt from all State and Local Sales Taxes.
11. Complete column marked "Total Amount" which is computed by multiplying "Quantity" column by "Unit Price" column.
12. Indicate any discount in blank provided for "Terms". Cash discounts for less than thirty (30) days or less than one percent (1%) will be accepted, but will not be considered in determining low bidder.
13. In blank provided for "Delivery" indicate amount of time needed to complete delivery of entire order.
14. Signature of person completing bid must be submitted on each bid. A typed name without a signature WILL NOT be accepted.
15. Indicate Federal Identification Number or Social Security Number, whichever is applicable.
16. Return original bid to address shown. Make copy of bid for your records. Bidders are hereby advised that the U.S. Postal Service does not make delivery to our physical location.

Bids may be mailed through the U.S. Postal Service to our box at:

DOTD Procurement Section
P. O. Box 94245, Capitol Station
Room 304M, Headquarters
Baton Rouge, LA 70804-9245

Bids may be delivered by hand or courier service to our physical location as follows:

DOTD Procurement Section
Room 304M, Headquarters
1201 Capitol Access Road
Baton Rouge, LA 70802.

Bidder is solely responsible for ensuring that it's courier service provider makes inside deliveries to our physical location. The DOTD Procurement Office is not responsible for any delays caused by the bidder's chosen means of bid delivery. Bidder is solely responsible for the timely delivery of its bid. Failure to meet the bid opening date and time shall result in rejection of the bid.

17. Bids must be submitted on D.O.T.D. bid form.
18. Deviations to the Department's Special Conditions and Specifications will not be allowed. Vendor's special conditions and terms which differ from the bid proposal will cause rejection of bid.
19. By signing the bid form, the bidder certifies that this bid is made without collusion or fraud.
20. In accordance with R.S. 39:1594 (Act 121), the person signing the bid must be: A current corporate officer, partnership member or other individual specifically authorized to submit a bid as reflected in the appropriate records on file with the Secretary of State: or An individual authorized to bind the vendor as reflected by an accompanying corporate resolution, certificate or affidavit; or An individual listed on the State of Louisiana Bidder's Application as authorized to execute bids.

Evidence of authority to submit the bid shall be required in accordance with R.S. 38:2212 (A)(1)(c) and/or R.S. 39:1594(C)(2)(d).

By signing the bid, the bidder certifies compliance with the above.

DEPARTMENT OF TRANSPORTATION AND DEVELOPMENT
JOHNNY B. BRADBERRY, SECRETARY
DANA D. WATLINGTON
DOTD PROCUREMENT DIRECTOR
STREET ADDRESS: 1201 CAPITOL ACCESS ROAD, ROOM 304M
MAILING ADDRESS: P.O. BOX 94245, BATON ROUGE, LA 70804-9245

(Rev. 05/10/05)

SPECIAL INSTRUCTIONS & CONDITIONS

1. PURPOSE AND INTENTION: The purpose and intention of this invitation to bid is to establish a contract between the Department and the successful bidder(s) to furnish supplies, materials, equipment and/or services in accordance with requirements described herein.

2. QUANTITIES: No specific quantities are given or guaranteed on Contracts. Only such quantities are required by the Department during the contractual period will be ordered.

3. BID DEADLINES: All Sealed Bids will be received by the Department in Room 304M, Headquarters Administration Building, 1201 Capitol Access Road, Baton Rouge, Louisiana until **9:45 a.m.** on the same date as shown on bid form. **All bids must be time and date stamped in the Procurement Section or it will be considered late.** No bids will be accepted after this time. At 10:00 a.m. of the same day, they shall be publicly opened and read in Room 304M, Headquarters Administration Building.

Request for Quotations must be received by **2:00 p.m.** on DATE BID DUE as shown on bid form. **All bids must be time and date stamped in the Procurement Section or it will be considered late.** Bids received after 2:00 p.m. will not be accepted.

4. BID OPENING: Bidders may attend the bid opening, but no information or opinions concerning the ultimate contract award will be given at the bid opening or during the evaluation process. Bids may be examined within 72 hours after bid opening. Information pertaining to completed files may be secured by visiting the Department during normal working hours. Written bid tabulations will **not** be furnished.

5. AWARD: The Department reserves the right to award items separately, by groups or on overall low bid basis to the lowest responsible and responsive bidder meeting the requirements and criteria set forth in the Invitation to Bid, taking into consideration the best interest of the Department. Award will be made without discrimination on grounds of race, color, or national origin. Minority business enterprises will be afforded full opportunity to submit bids.

6. TIE BIDS: In state vendors shall be given preferences in the case of tie bids.

7. CANCELLATION OF AWARD: The Department reserves the right to cancel any contract, in accordance with purchasing rules and regulations, for cause, including but not limited to, the following: (1) Failure to deliver within the time specified in the contract; (2) Failure of the product or service to meet specifications, conform to sample quality or to be delivered in good condition; (3) Misrepresentation by the contractor; (4) Fraud, collusion, conspiracy or other unlawful means of obtaining any contract with the State; (5) Conflict of contract provisions with constitutional or statutory provisions of State or Federal Law; (6) Any other breach of contract. Should the contractor find that due to increase in price or product availability, order cannot be filled, he is to submit to the DOTD Procurement Director a request for cancellation stating the reason for the request.

8. **REJECTION OF BID: THE DEPARTMENT OF TRANSPORTATION AND DEVELOPMENT RESERVES THE RIGHT TO REJECT ANY AND/OR ALL BIDS AND WAIVE ANY INFORMALITIES.**

9. TAXES: EFFECTIVE SEPTEMBER 11, 1991, PURSUANT TO ACT 1029 OF THE 1991 REGULAR SESSION OF THE LEGISLATURE, THE STATE AND ANY OF ITS AGENCIES, BOARDS OR COMMISSIONS ARE **EXEMPT** FROM THE LOUISIANA STATE SALES/USE TAXES.

10. NEW PRODUCTS: Unless specifically called for in the solicitation, all products for purchase must be new, never previously used, and the current model and/or packaging. No remanufactured, demonstrator, used or irregular product will be considered for purchase unless otherwise specified in the solicitation. The manufacturer's standard warranty will apply unless otherwise specified in the solicitation.

11. BRANDS: UNLESS OTHERWISE SPECIFIED IN THE SOLICITATION, ANY MANUFACTURER'S NAME, TRADE NAME, BRAND NAME, OR CATALOG NUMBER USED IN THE SPECIFICATION IS FOR THE PURPOSE OF DESCRIBING THE STANDARD OF QUALITY, PERFORMANCE, AND CHARACTERISTICS DESIRED AND IS NOT INTENDED TO LIMIT OR RESTRICT COMPETITION.

12. ALTERNATE BIDS: IF ITEM(S) DOES NOT FULLY COMPLY WITH SPECIFICATIONS (INCLUDING BRAND AND/OR PRODUCT NUMBER), BIDDER MUST STATE IN WHAT RESPECT ITEM(S) DEVIATE. FAILURE TO NOTE EXCEPTIONS ON THE BID FORM WILL NOT RELIEVE THE SUCCESSFUL BIDDER(S) FROM SUPPLYING THE ACTUAL PRODUCTS REQUESTED.

13. DEFAULT OF CONTRACTOR: Failure to deliver within the time specified in the bid will constitute a default and may cause cancellation of the contract. Where the Department has determined the contractor to be in default, the State reserves the right to purchase any or all products or services covered by the contract on the open market and to charge the contractor with cost in excess of the contract price. Until such assessed charges have been paid, no subsequent bid from the defaulting contractor will be considered.

14. APPLICABLE LAW: All contracts shall be construed in accordance with and governed by the laws of the State of Louisiana.

15. SPECIAL ACCOMMODATION: Any "Qualified Individual with a Disability" as defined by the Americans with Disabilities Act who has submitted a bid and desires to attend the bid opening, must notify this office in writing no later than seven (7) days prior to the bid opening date of their need for special accommodations. If the request cannot be reasonably provided, the individual will be informed prior to bid opening.

16. INDEMNITY: Contractor agrees, upon receipt of written notice of a claim or action, to defend the claim or action, or take other appropriate measure, to indemnify, and hold harmless, the State, its officers, its agents and its employees from and against all claims and actions for bodily injury, death or property damages caused by the fault of the contractor, its officers, its agents, or its employees. Contractor is obligated to indemnify only to the extent of the fault of the contractor, its officers, its agents, or its employees. However, the contractor shall have no obligations as set forth above with respect to any claim or action from bodily injury, death or property damages arising out of the fault of the State, its officers, its agents or its employees.

17. EQUAL OPPORTUNITY CLAUSE: The Department of Transportation and Development and the State of Louisiana is an equal opportunity employer and looks to its contractors, subcontractors, vendors and suppliers to take affirmative action to affect this commitment in its operations. By submitting and signing this bid, bidder certifies that he agrees to abide by the requirements of the following as applicable: Title VI and VII of the Civil Rights Act of 1964, as amended by the Equal Opportunity Act of 1972, Federal Executive Order 11246, Federal Rehabilitation Act of 1973, as amended, the Veteran's Readjustment Assistance Act of 1974, Title IX of the Education Amendments of 1972, The Age Act of 1975, and bidder agrees to abide by the requirements of the Americans with Disabilities Act of 1990. Bidder agrees not to discriminate in its employment practices and will render services under any contract entered into as a result of this solicitation without regard to race, color, religion, sex, national origin, veteran status, political affiliation, or disabilities. Any act of discrimination committed by bidder, or failure to comply with these statutory obligations when applicable shall be grounds for termination of any contract entered into as a result of this proposal. Bidder agrees to keep informed of and comply with all Federal, State, and local laws, ordinances and regulations which affect his employees or prospective employees.

(Rev. 05/10/05)

Stock Number
34-95-8000

DOTD Spec. 346-002
Revised 4/2/2003
2 Pages

LOUISIANA
DEPARTMENT OF TRANSPORTATION AND DEVELOPMENT
SPECIFICATIONS

STEEL TRIPOD SIGN HOLDER

DESCRIPTION:

The following specification sets forth the requirements for portable steel tripod sign holders for 30 inch, 36 inch and 48 inch rigid signs.

REQUIREMENTS:

The holders shall be fabricated of 16 gage 1 1/4 inch, and 1 inch, cold-formed galvanized tubing meeting ASTM-A500 rated steel. The tripod shall be an Eastern Metal-USA Sign, Model E-350, or an approved equal.

CERTIFICATION:

Bidders shall provide the Department with Federal Highway Administration (FHWA) approval that the tripod stand meets the standards set forth in NCHRP Report 350 or shall submit a report stamped by a Professional Engineer that the stand supplied would be "nearly identical" to an FHWA approved stand.

If certification is not furnished within ten days after notification, the bidder will not be considered for award.

PACKAGING:

Tripod stands shall be stacked vertically with no more than one hundred (100) on individual pallets.

All stands shall be banded securely to the pallet for shipping.

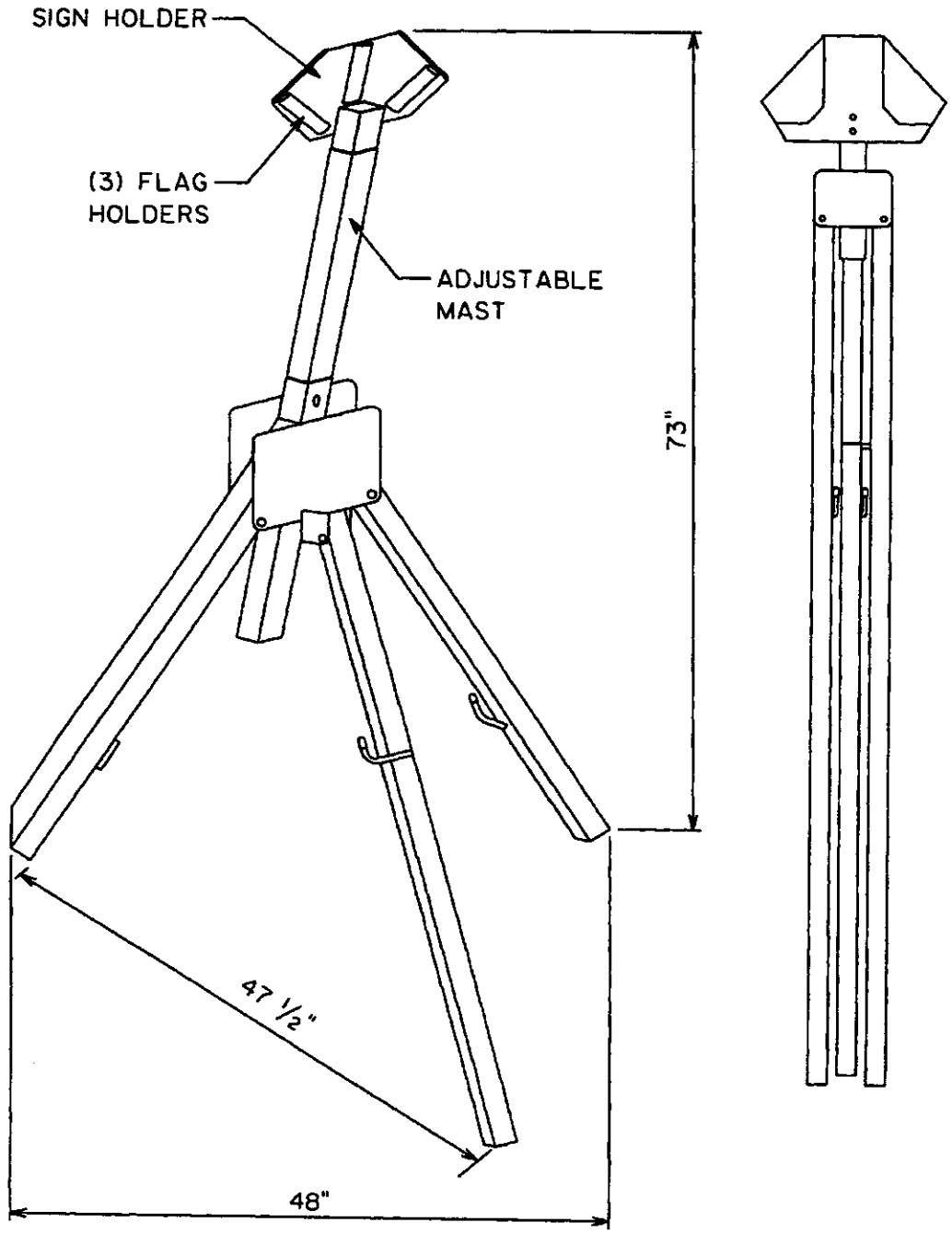
SIGN HOLDER
(3) FLAG HOLDERS
ADJUSTABLE MAST
73"
47 1/2"
48"